Lifesaving Systems Corporation
220 Elsberry Road
Apollo Beach, FL 33572
www.Lifesavingsystems.com

Quad Lock Aviation Safety Belt

Test Report

Part Number: 219

Written by: THomas Beach Date: 16-Jan-17

(LSC Engineering) Thomas Beach

Approved by: Mario Vittone Date: 16-Jan-17

(LSC Management)

PROPRIETARY & CONFINDENTIAL

THIS DOCUMENT CONTAINS PROPRIETARY INFORMATION OWNED BY LIFESAVING SYSTEMS AND MAY NOT BE DUPLICATED, COMMUNICATED TO OTHER PARTIES OR USED FOR ANY PURPOSE WITHOUT THE EXPRESS WRITTEN PERMISSION OF LIFESAVING SYSTEMS CORP.

CONTENTS

1.0 General: 3
2.0 Description: 3
3.0 Specifications: 3
4.0 Design and Construction: 4
4.1 Part List 4
4.2 Hardware 5
4.3 Webbing 6
4.4 Stitching 7
4.4.1 Adjuster Belt Assembly: 7
4.4.2 Adjuster Buckle: 7
4.4.3 Snap Hook: 7
4.4.4 Adjusters to Main Belt: 8
5.0 Static Load Test: 8
5.1 Summary of Results: 8
5.2 Test Data Sheet: 9

1.0 GENERAL:

Belt shall be worn above the hips and adjusted for a tight fit for best protection. Ensure that the screw Lock Snap Hook is locked when attached to a secure approved aircraft load rated attachment fitting. Tether length shall be adjusted to prevent user from exiting aircraft inadvertently. Failure to comply with these warnings may result in serious injury or death.

2.0 DESCRIPTION:

For use by helicopter crew working near open hatches or doors. Combines a high degree of security with quick releases. Features a 5” wide inner belt with two outer Mil-Spec nylon webbing waist belts. Each waist belt is secured with double locking quick release safety buckles. The double buckle system provides the extra level of safety needed in the aviation environment. The quick-adjusting, single tether strap located in the center back of the belt has a stainless steel snap hook with locking screw.

3.0 SPECIFICATIONS:

- (#219) Regular fits waist sizes 30" – 44"
- (#219-L) Large fits waist sizes 38” – 50”

4.0 DESIGN AND CONSTRUCTION:

4.1 PART LIST

Item #7 is sewn inside webbing of belt located behind QRS buckles. Not shown.
Item #8 is sewn on the inside of the belt located in the center. Not shown.
Item #11 is sewn on the inside of the belt. Not shown.

Item No:	Part No:	Part Description:	QTY:	Stock Size:
1	395	QRS Buckle, High-Strength	1	
2	452	HI-STR SL Bar ADJ, 1.75”	1	
3	452-K	HI-STR ADJ w/QRSB KEY	1	
4	369	Snap Hook w/Screw Lock	1	
5	HP007	Pull Tab	1	
6	L001	Label, LSC Oval PVC	1	
7	M015	1/16 WHT Styrene Plastic		4-1/2” x 4”
8	NFW001	¾” 16 PT BLK PP Webbing		44-1/4” (1121mm)
9	NFW002	1” 16PT Poly Pro Web BLK		7-1/2” (190mm)
10	NFW017	1.75” BLK NYL T-13, MIL-W-40881/AU		80” (2025mm) 70” (1771mm)
11	NFW023	2” 16PT Polypro w/Rubber		44-1/4” (1121mm)
12	NFW027	876 5” #4000 Black PP Web		96” (2438mm)
13	NF003	1” BLK Elastic		4” (101mm)

4.2 HARDWARE

- Part Number: 395
- Description: Quick Release Safety Buckle, High-Strength

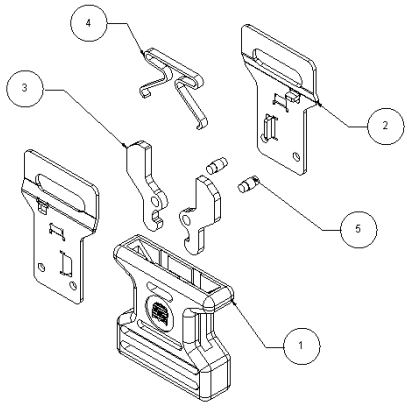

Item	P/N	Description	Material
1	392-1R	Housing, Red	Acetal
2	393-1	Frame	S.S 304
3	393-3-7	Latch	S.S 17-7PH
4	393-4	Spring	S.S 17-7PH
5	385-6	Collar Rivet	S.S 303

- Part Number: 452-K
- Description: Quick Release Safety Buckle, High-Strength

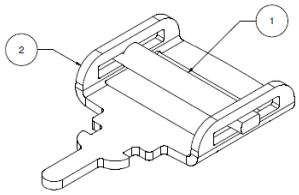

Item	P/N	Description	Material
1	451-02	Adjuster Bar	S.S 304
2	452-01k	Frame w/Key	S.S 17-7PH

- Part Number: HP007
- Description: Pull Tab

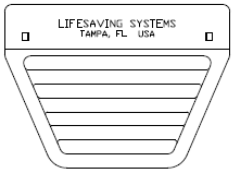

Item	P/N	Description	Material
1	HP007	Tab, 1.75" Webbing	Acetal

- Part Number: 369
- Description: Snap Hook w/Screw Lock
- Minimum Breaking Limit: 5000lbs (2268kg)

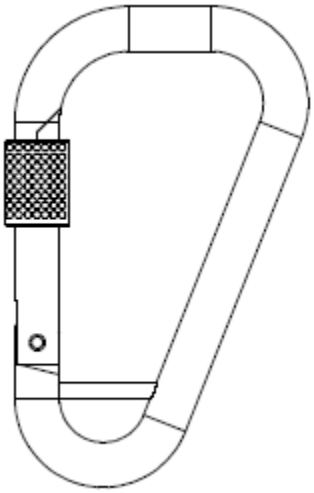

Item	P/N	Description	Material
1	369	Snap Hook w/Screw Lock	S.S 304

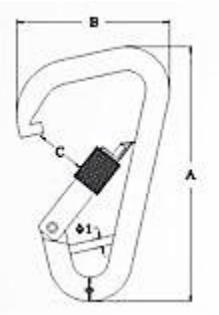

A = 4.72" 120mm

B = 2.75" 70mm

C = 0.96" 24.5mm

NOTE: Failure of the latch gate to be engaged in the hook slot will reduce hook breaking strength to approximately 1500lbs (680kg). and will prevent lock button from engaging lock.

4.3 WEBBING

Main Strap:

- Mil-Spec Type-13 Nylon webbing
- Minimum Breaking Strength 7,000lbs (3175kg)

Main Belt:

- #876 Black Polypropylene Webbing
- Minimum Breaking Strength 4,000lbs (1814kg)

4.4 STITCHING

TEX 70 Bonded Nylon: End Tabs

TEX 90 Bonded Nylon: Main Belt Assembly

TEX 210 Bonded Nylon: Main Belt Patterns, Buckle Attachments, Adjuster Pattern, and Snap Hook

4.4.1 ADJUSTER BELT ASSEMBLY:

Material: Bonded Nylon Thread

TEX 210

Construction: 630dx3

Thread Strength: 32lbs

Pattern: 6-Point Double "W",

1-5/16" x 2-3/8"

4.4.2 ADJUSTER BUCKLE:

Material: Bonded Nylon Thread

TEX 210

Construction: 630dx3

Thread Strength: 32lbs

Pattern: 6-Point Double "W",

1-3/8" x 1-3/8"

4.4.3 SNAP HOOK:

Material: Bonded Nylon Thread

TEX 210

Construction: 630dx3

Thread Strength: 32lbs

Pattern: 6-Point Parallel Zig-Zag

1-3/4" x 4"

4.4.4 ADJUSTER WEBBING TO MAIN BELT:

Material: Bonded Nylon Thread

TEX 210

Construction: 630dx3

Thread Strength: 32lbs

Pattern: 6-Point Double "W",

1-3/8" x 1-3/8"

5.0 STATIC LOAD TEST:

A static load test to failure of the adjusters was performed on 5/31/2013 at Lifesaving Systems Corp.

5.1 Summary of Results:

#452: Type 10 webbing laced through adjuster and sewn loop around frame bar.

Test #1: Adjuster frame failed at 3,535lbs.

Test #2: Adjuster frame failed at 3,217lbs.

Test #3: Adjuster frame failed at 3,368lbs.

#452-K: Type 13 webbing laced through adjuster and key attached to #395 buckle.

Test #1: Buckle and key engagement failed on one latch ear at 3,695lbs.

#452-K: Type 11 webbing laced through adjuster and key attached to #395 buckle.

Test #1: Buckle and key engagement failed on one latch ear at 3,266lbs.

#452-K: From previous pull, Type 10 webbing laced through adjuster and sewn loop around key side bar.

Test #1: Adjuster frame failed at 3,913lbs.

5.2 Test Data Sheet:

Lifesaving Systems Corp.
Test Data Sheet

Product Name: Hi-Strength Adjuster and Adjuster w/Key
Part Number: 452 / 452-K
Lot Number: N/A **Serial Number:** N/A
Test Device: LSC #62 10,000lbs Load Cell, Electronic
Test Description: Static load test to failure of Adjusters
Test Performed: Destructive Testing
Date: 5/31/2013 **Time:** 1015

Comments (Actual Measured Values)**:**
#452: Type 10 webbing laced through adjuster & sewn loop around frame bar.
Test #1: Adjuster frame failed at 3535lbs.
Test #2: Adjuster frame failed at 3217lbs.
Test #3: Adjuster frame failed at 3368lbs.

#452-K: Type 13 webbing laced through adjuster & key attached to #395 buckle.
Test #1: Buckle and key engagement failed on one latch ear at 3695lbs.

#452-K: Type 10 Webbing laced through adjuster & key attached to #395 buckle.
Test #1: Buckle and key engagement failed on one latch ear at 3266lbs.

#452-K: From previous pull, Type 10 webbing laced through adjuster & sewn loop around key side bar.
Test #1: Adjuster frame failed at 3913lbs.

Recommend Acceptance: ☒
Recommend Rejection: ☐

Test Performed By: *Larry Arthur, Production Manager*

Test Witnessed By: *Joshua Folckemer, QA Manager*

TestData.doc
F-824-035
Rev. B