Lifesaving Systems Corporation
220 Elsberry Road
Apollo Beach, Florida 33572
www.lifesavingsystems.com

STATIC LOAD TEST REPORT

TALON II W/SWIVEL, TI (MACHINED)

513-TIM



PROPRIETARY & CONFINDENTIAL

THIS DOCUMENT CONTAINS PROPRIETARY INFORMATION OWNED BY LIFESAVING SYSTEMS AND MAY NOT BE DUPLICATED, COMMUNICATED TO OTHER PARTIES OR USED FOR ANY PURPOSE WITHOUT THE EXPRESS WRITTEN PERMISSION OF LIFESAVING SYSTEMS CORP.

Prepared by: _____ Date: 7/7/2022
Kyle Curry, **Engineering**

Approved by: _____ Date: 7/7/2022
Taran Fleming, **Quality Manager**

CONTENTS

CONTENTS 2
1.0 PURPOSE 3
2.0 PART DESCRIPTION 3
3.0 DESIGN AND MATERIAL 4
3.1 PART LIST 4
4.0 TEST REQUIRMENTS 5
4.1 MAJOR AXIS TESTING 5
5.0 TEST EQUIPMENT AND CALIBRATION 6
5.1 EQUIPMENT 6
6.0 RESULTS 7
7.0 SUMMARY 8
8.0 APPENDIX 9
8.1 TEST SAMPLE 1 9

1.0 PURPOSE

The purpose of this report is to prove that the 513-TIM Talon Hook II meets the static load strength requirements stated in the ANSI Z359 4.3.1.1.1 Tensile testing of Snap hook and Carabiner Bodies. There will be one (1) sample part tested during this experiment.

2.0 PART DESCRIPTION

This safety hook with an integrated swivel eye features a locking gate to reduce ring roll-out or inadvertent release. To open, simply press the latch on the spine and open the gate. After release, the spring loaded gate and latch will return to the locked positions. Moreover, an ergonomic design allows for easy grip and functioning with a single hand.

3.0 DESIGN AND MATERIAL

3.1 PART LIST

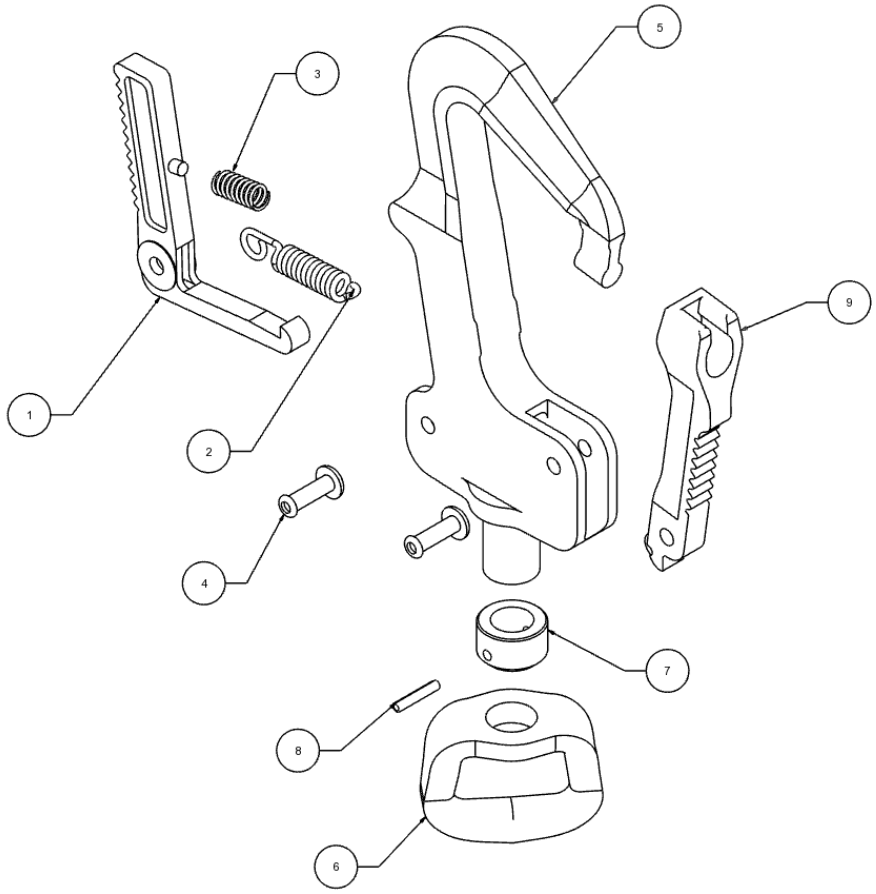

Item No	Part No	Part Description	Material	Qty.
1	511-03	LATCH	17-4PH SS	1
2	511-04	GATE SPRING	17-7PH SS	1
3	511-05	LATCH SPRING	302 SS	1
4	511-06	RIVET, SEMI-TUBULAR	430 SS	2
5	513-01TIM	HOOK BODY, TI, TALON II (MACHINED)	TITANIUM	1
6	513-02M	SWIVEL	17-4PH SS	1
7	513-03	NUT, SWIVEL	303 SS	1
8	513-05	3/32” x ½” SLOT PIN	420 SS	1
9	513-06	Gate	17-4PH SS	1

4.0 TEST REQUIRMENTS

4.1 MAJOR AXIS TESTING

Each test shall be carried out on a new sample. (See Appendix I)

Major Axis Testing: Mount the connector in the tensile testing machine and apply the load which are arranged to be perpendicular to the major axis. The time to reach 5000lbs shall be greater than 1 minute to avoid dynamic effects. The rate of force application will be performed incrementally in steps of 500lbs every 6-10 seconds until the maximum force of 5000lbs is achieved. The part will then be measured and checked for permanent deformation and/or gate failure.

The part will then be taken to 8000lbs incrementally in steps of 500lbs every 3-6 seconds. Finally, the part will be taken to 10,000lbs incrementally in steps of 500lbs every 3-6 seconds.

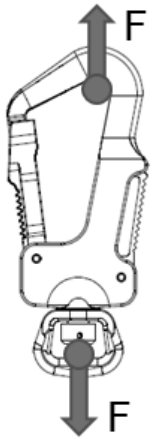

F = Force

5.0 TEST EQUIPMENT AND CALIBRATION

5.1 EQUIPMENT

The primary testing equipment consists of the following items:

1. Force Measurement: 10,000lb S-Beam load cell with a digital gauge. Calibration sticker valid until 06/22/2023.



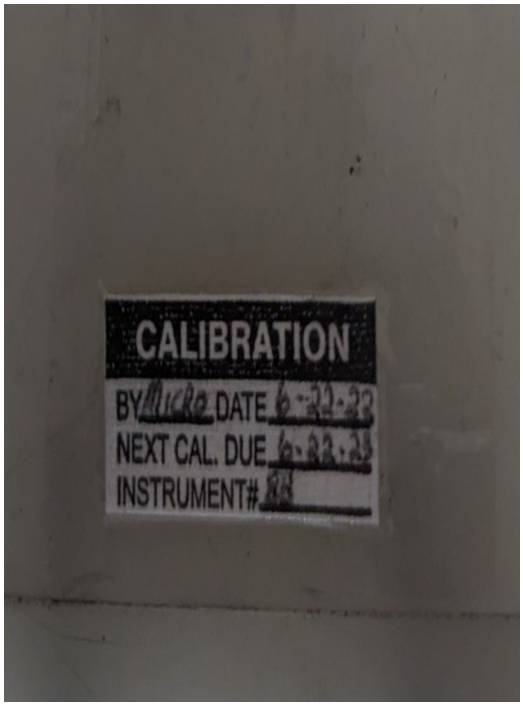

2. Load Tester: Hydraulic Cylinder

6.0 RESULTS

5000lbs				
Sample#	**Load (lbs)**	**Pass/Fail**	**Permanent Deformation of Hook Body**	**Gate Function**
1	5742	PASS	N	Y

8000lbs				
Sample#	**Load (lbs)**	**Pass/Fail**	**Permanent Deformation of Hook Body**	**Gate Function**
1	8185	PASS	N	Y

1000lbs				
Sample#	**Load (lbs)**	**Pass/Fail**	**Permanent Deformation of Hook Body**	**Gate Function**
1	10026	PASS	N	Y

7.0 SUMMARY

From the results shown above, the test sample hook body passed the static load test at 5000lbs, 8000lbs, and 10,000lbs with no measurable signs of permanent deformation. The only part of the assembly that showed visible signs of permanent deformation was the swivel at both 8000lbs and 10,000lbs. Additionally, the spring-loaded gate and latch mechanism was functional at all stages of the test report.

8.0 APPENDIX

8.1 TEST SAMPLE 1



Figure 1. SAMPLE BEFORE LOAD TEST



Figure 2. SETUP OF SAMPLE AFTER BEING PULLED TO 5000LBS

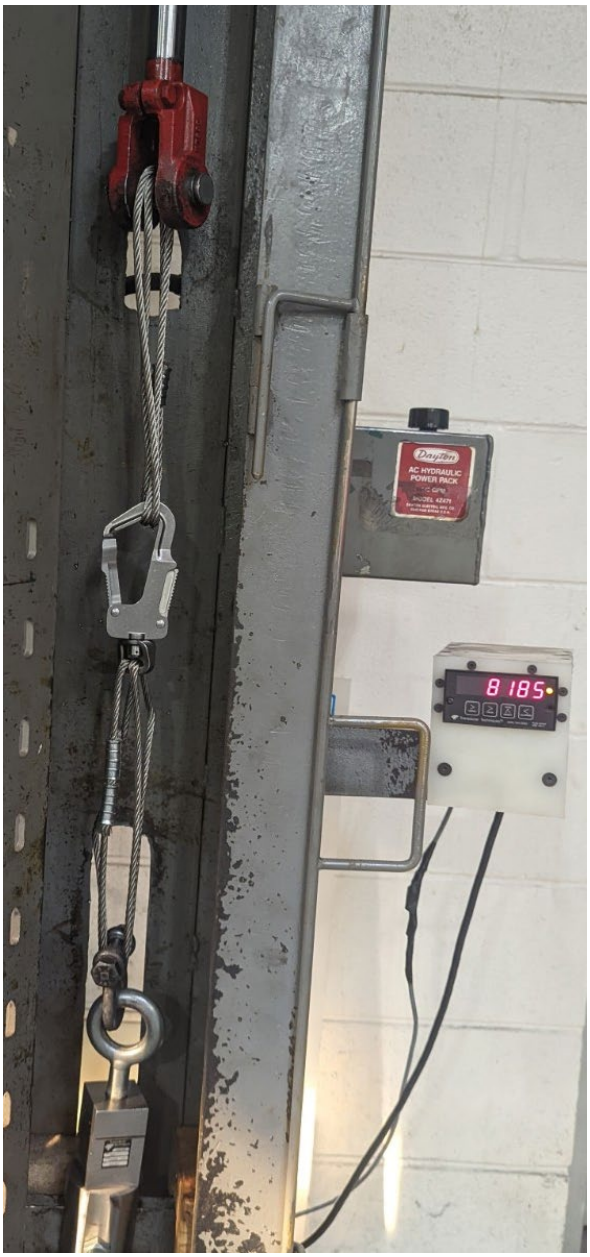

Figure 3. SETUP OF SAMPLE AFTER BEING PULLED TO 8000LBS



Figure 4. SETUP OF SAMPLE AFTER BEING PULLED TO 10,000LBS



Figure 5. SAMPLE AFTER BEING PULLED TO 10,000LBS.